Slug-Buster® Ram and Foot Pump Hydraulic Driver Kits

7625

- Foot operation frees both hands to position punch.
- Punches 10 times faster than wrench method.
- Will also drive 751 Cable Cutter head.
- Powerful 11-ton hydraulic ram.
- Can be used with most standard round, Slug-Buster® and Slug-Splitter SC™ punch sizes. (Not 1/2", 9/16" 5/8")
- Can be used with non-round punches (adapter may be required).

CAT. NO.	UPC NO.	DESCRIPTION	WEIGHT LBS.	WEIGHT kg.
7625	25097	Driver, Foot Pump, Steel Case	37	17
7606SB	07173	Driver, Foot Pump, Slug-Buster® Punches, Dies and Draw Studs for 1/2" through 2" Conduit, Steel Case	42	19
7610SB	07174	Driver, Foot Pump, Slug-Buster® Punches, Dies & Draw Studs for 1/2" through 2" Conduit, Slug-Buster® Punches and 2 1/2" through 4" Conduit Standard Round Punches	60	27

STEEL CAPACITIES FOR CONDUIT SIZES

REQUIRED DRAW STUD AND ACCESSORIES	STANDARD & SLUG-BUSTER® PUNCHES						STANDARD				SLUG-SPLITTER SC™					
	1/2"	3/4"	1"	1-1/4"	1-1/2"	2"	2-1/2"	3"	3-1/2"	4"	1/2"	3/4"	1"	1-1/4"	1-1/2"	2"
3/4" Stud (03294), 3/8" Stud (30043) & Spacers	MS															
3/4" Stud (03294), Long Spacer		MS	MS	MS	MS	MS										
3/4" Stud (03294), Short Spacer					MS	MS										
3/4" Stud (03294)							MS	MS								
3/4" Stud (03294), & Sleeve (03170)									MS	MS						
7/16" Stud (29451)											SS					
3/4" Stud (29452)												SS	SS	SS	SS	SS

MS = 10 GA. MILD STEEL SS = 10 GA. STAINLESS STEEL

Ram and Foot Pump Kits Parts List

	CAT. NO.	UPC NO.	DESCRIPTION	HOLE SIZE: CONDUIT & PIPE SIZE	HOLE SIZE: ACTUAL Ø INCH	HOLE SIZE: ACTUAL Ø mm	HOLE SIZE: PG	KIT CAT./UPC NO.: 7625/ 25097	KIT CAT./UPC NO.: 7606SB/ 07173	KIT CAT./UPC NO.: 7610SB/ 07174
Punches and Dies	721-1/2	31756	1/2" Conduit Size Slug-Buster® Punch	1/2"	7/8	0.885	22.5	16		1	1
	14722	14722	1/2" Conduit Size Die	1/2"	7/8	0.885	22.5	16		1	1
	721-3/4	31757	3/4" Conduit Size Slug-Buster® Punch	3/4"	—	1.115	28.3	21	—	1	1
	124AV	06972	3/4" Conduit Size Die	3/4"	—	1.115	28.3	21		1	1
	721-1	31758	1" Conduit Size Slug-Buster® Punch	1"	—	1.362	34.6	—		1	1
	126AV	04011	1" Conduit Size Die	1"	—	1.362	34.6	—		1	1
	721-1-1/4	31759	1-1/4" Conduit Size Slug-Buster® Punch	1-1/4"	1-11/16	1.701	43.2	—		1	1
	128AV	04013	1-1/4" Conduit Size Die	1-1/4"	1-11/16	1.701	43.2	—		1	1
	721-1-1/2	31760	1-1/2" Conduit Size Slug-Buster® Punch	1-1/2"	1-15/16	1.951	49.6	—		1	1
	440AV	04061	1-1/2" Conduit Size Die	1-1/2"	1-15/16	1.951	49.6	—		1	1
	721-2	31761	2" Conduit Size Slug-Buster® Punch	2"	2-3/8	2.416	61.5	—		1	1
	442AV	04063	2" Conduit Size Die	2"	2-3/8	2.416	61.5	—		1	1
	1429AV	04175	2-1/2" Conduit Size Punch	2-1/2"	2-7/8	2.914	74.0	—			1
	1430AV	04177	2-1/2" Conduit Size Die	2-1/2"	2-7/8	2.914	74.0	—			1
	1431AV	04180	3" Conduit Size Punch	3"	3-1/2	3.539	89.9	—			1
	1432AV	04183	3" Conduit Size Die	3"	3-1/2	3.539	89.9	—			1
	2982AV	04653	3-1/2" Conduit Size Punch	3-1/2"	4	4.044	102.7	—			1
	2981AV	04652	3-1/2" Conduit Size Die	3-1/2"	4	4.044	102.7	—			1
	2984AV	04655	4" Conduit Size Punch	4"	4-1/2	4.544	115.4	—			1
	2983AV	04654	4" Conduit Size Die	4"	4-1/2	4.544	115.4	—			1
Draw Studs and Misc.	746	17091	(A) Ram (includes 1 ea. of items B, C, and D)						1	1	1
	2113AA	03294	(B) Draw Stud–3/4" x 5-3/8"						1	1	1
	54167	54167	(C) Female Coupler–1/4"						1	1	1
	54168	54168	(D) Dust Plug						1	1	1
	1557AA	03170	(F) Punch Sleeve						1	1	1
	1614SS	30043	(G) Draw stud–3/8"x 2-13/16"						2	2	2
	15908	15908	(H) Spacer Group (includes 1 ea. of items I, J, and K)						1	1	1
	1924AA	03248	(I) Spacer-Short						1	1	1
	1925AA	03249	(J) Spacer-Medium						1	1	1
	1926AA	06904	(K) Spacer-Long						1	1	1
	34410	34410	(L) Kwik Stepper® Step Bit 1/2"						1	1	1
	1725	31353	(S) Hydraulic Foot Pump (includes 1 ea. – 54167 female coupler and 54168 dust plug)						1	1	1
	37729	37729	(T) High Pressure Hose Unit – 1/4" x 10'; filled with hydraulic oil; (includes the following 2 items)						1	1	1
	54169	54169	Couplers						2	2	2
	54170	54170	Dust Caps						2	2	2
	23955	23955	(U) Steel case						1	1	1
	25094	25094	Tray						1	1	1

RAM AND FOOT PUMP HYDRAULIC DRIVER PARTS IDENTIFICATION
(Match letters above to drawing.)

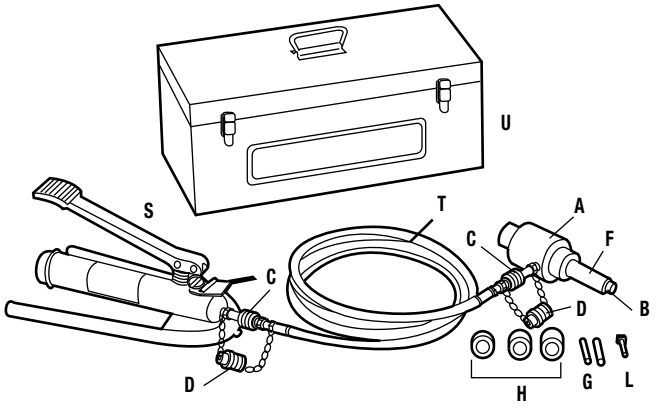

R = REPLACEMENT PART A = ACCESSORY

USA Tel: 800.435.0786 Fax: 800.451.2632
Canada Tel: 800.435.0786 Fax: 800.524.2853
International Tel: +1.815.397.7070 Fax: +1.815.397.9247